HATCH DWG. No.
H295533-0100-240-260-1008-001

GENERAL NOTES

1. DIMENSIONS ARE IN INCHES UNLESS OTHERWISE SHOWN.
2.DRAWING SHALL BE USED FOR VERIFICATION OF THE PURCHASED PART FROM HARBISON-WALKER INTERNATIONAL, 2-L-4.5" CLIP AND 2A ANCHOR X 3.5".
3. MATERIAL: 253MA.

TOLERANCING

GENERAL INFORMATION AND MANUFACTURING REQUIREMENTS UNLESS NOTED OTHERWISE

- TOLERANCES AND DIMENSIONS ARE NON-CUMULATIVE.
- REMOVE ALL BURRS AND SHARP EDGES.
- DO NOT SCALE THE DRAWING.

ITEM	STANDARD	CLASS / TOLERANCE
DIMENSIONING AND TOLERANCING	ASME Y14.5-2009	
WELDING SYMBOLS	AWS A2.4-2012	
WELDING	AWS D1.1M-2015, OR AWS D1.6M-2007	
WELDED CONSTRUCTION	ISO 13920: AE	BF
MACHINED SURFACE DIMENSION	ISO 2768: fH	
SURFACE FINISH		6.3 MICROMETERS
THERMAL CUTTING DIMENSIONS	ISO 9013: 2002	332
GENERAL THREADING	ISO 965: 1998	
DIMENSIONS RELATING TO DRILLED HOLES		± 1mm

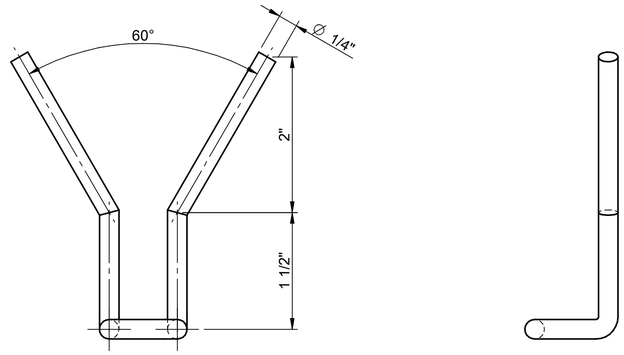

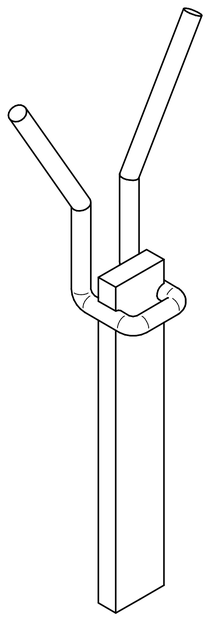

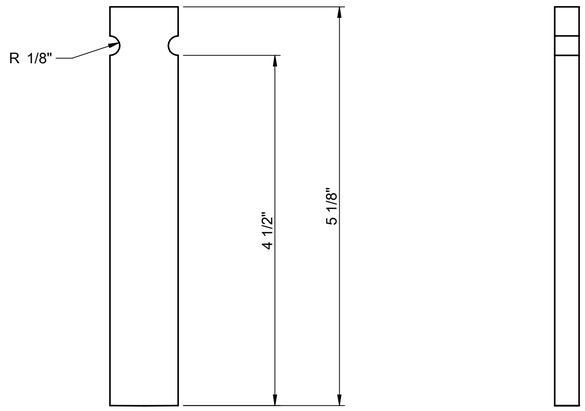

ISSUED FOR BID
DO NOT USE FOR CONSTRUCTION DATE: 2023-05-09

THIS DRAWING IS CONFIDENTIAL AND THE SOLE AND EXCLUSIVE PROPERTY OF HATCH LTD. ("HATCH"). ANY DISCLOSURE OF IT, WHETHER IN WHOLE OR IN PART , IS NOT PERMITTED WITHOUT THE EXPRESS WRITTEN PERMISSION OF HATCH . ALL RIGHTS TO THE INTELLECTUAL PROPERTY THAT IS EMBODIED OR REFERENCED HEREIN SHALL AT ALL TIMES REMAIN THE PROPERTY OF HATCH. THIS DRAWING SHALL BE USED SOLELY FOR THE SPECIFIC PURPOSE FOR WHICH IT HAS BEEN PROVIDED TO YOU. AS APPROVED IN WRITING BY HATCH , HATCH DOES NOT ACCEPT AND DISCLAIMS ANY AND ALL LIABILITY OR RESPONSIBILITY ARISING FROM (A) ANY USE OF OR RELIANCE UPON THIS DRAWING BY ANY PERSONS FOR ANY PURPOSE OTHER THAN THE SPECIFIC PURPOSE THAT HAS BEEN APPROVED BY HATCH , AND/OR (B) ANY MODIFICATION, ALTERATION, VARIATION, OR MISUSE OF THIS DRAWING BY ANY PARTY WHATSOEVER. ANY USE OF THIS DRAWING BEYOND THE SPECIFIC PURPOSE THAT HAS BEEN APPROVED BY HATCH IS SUBJECT TO THE PRIOR WRITTEN APPROVAL OF HATCH.

HATCH

THIRD ANGLE

UNITS INCH OR AS NOTED

DRAWING No.	DRAWING TITLE
REFERENCE DRAWINGS	

REGISTERED PROFESSIONAL

No.	DESCRIPTION	BY	CHK'D	APP'D	DATE
A	FOR CLIENT REVIEW	S.H.	M.N.	S.F.	2023-04-14

REVISIONS

ROLE	NAME	SIGNATURE	DATE
DRAFTSPERSON	S.HOSSEINI		2023-04-27
DESIGNER	S.HOSSEINI		2023-04-27
CHECKER	M. NARANCIC		2023-05-09
DESIGN COORD.	C. MCINTYRE		2023-05-09
RESP. ENG.	A. KOKOURINE		2023-05-09
LEAD DISC. ENG.	A. KOKOURINE		2023-05-09
ENG. MANAGER	C. MCINTYRE		2023-05-09
PRO. MANAGER	S. FRANCEY		2023-05-09

DRAWING STATUS: FOR BID

PFIR FOR PCL

HOT PILOR PFIR
HWI ANCHOR WIRE AND CLIP

SCALE 1:1 OR AS NOTED

HATCH DWG. No. H295533-0100-240-260-1008-001
SHEET 1 OF 1

REV B

SHEET SIZE: A1