-BRAKE ALL SHARP EDGES .005-.015
-TOLERANCE DECIMAL +-.005 +-.0010
-HARD COAT ANODIZE MIL-A-8625 TYPE III
CLASS 2 , MATT BLACK .002 SURFACE
-ALL TOLERANCE APPLY AFTER ANODIZE

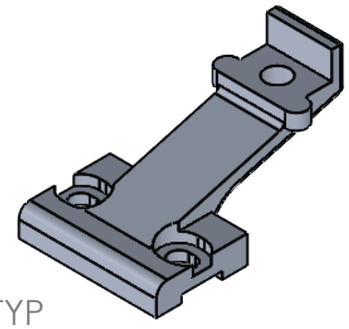

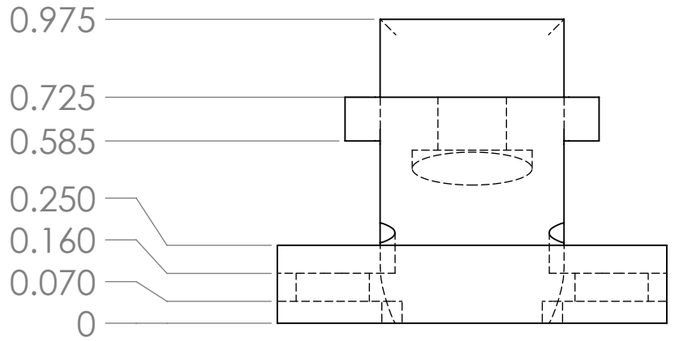

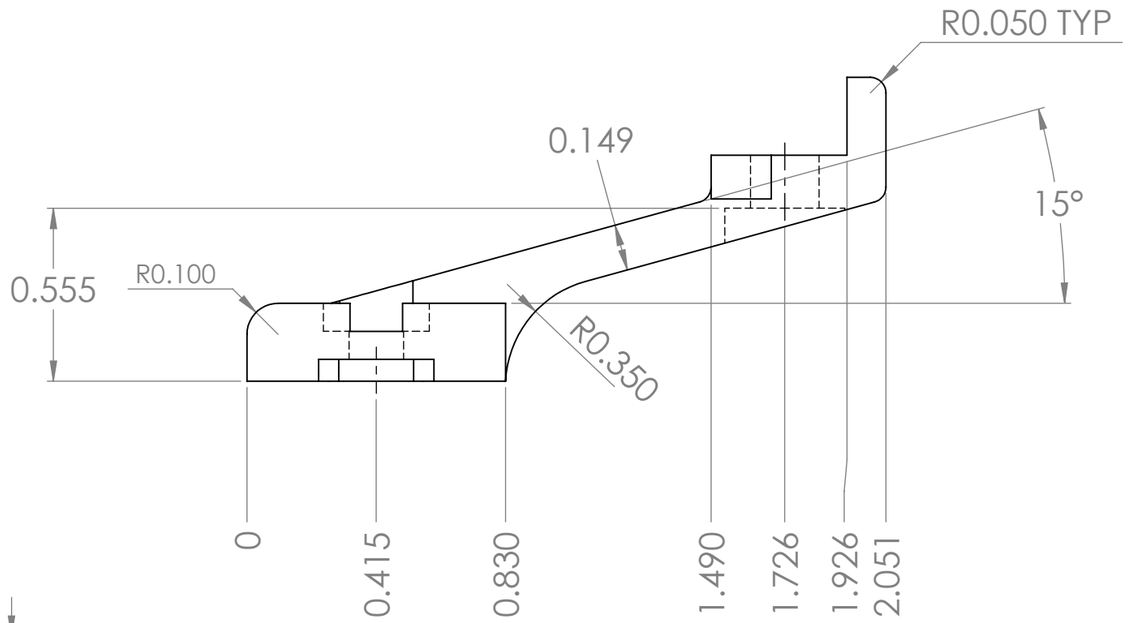

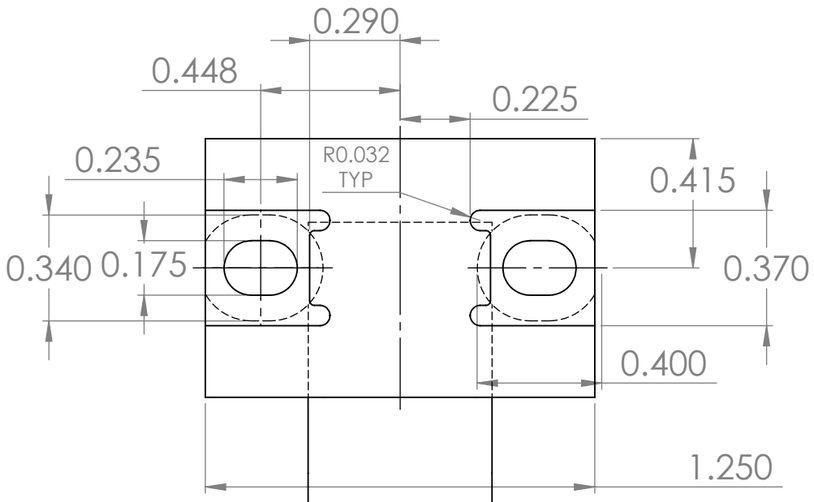

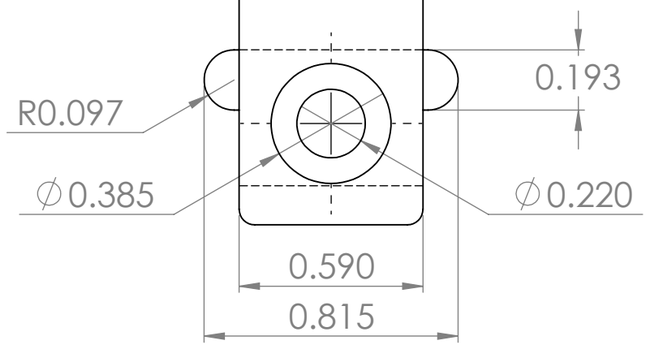

UNLESS OTHERWISE SPECIFIED: DIMENSIONS ARE IN MILLIMETERS SURFACE FINISH: TOLERANCES: LINEAR: ANGULAR:	FINISH: CLEAN			DEBURR AND BREAK SHARP EDGES	DO NOT SCALE DRAWING	REVISION
					RCMP-GRC	
	NAME	SIGNATURE	DATE		TITLE: 40mmlightmount	
DRAWN						
CHK'D						
APPV'D						
MFG						
Q.A				MATERIAL: 7075-T6	DWG NO. 77004532	A3
				WEIGHT:	SCALE:2:1	SHEET 1 OF 1